TYPE 2 - 375 SERIES (3-3/4" THROAT) W/ 1-1/4" REVEAL TRIM
VERTICAL GLASS JAMB

I

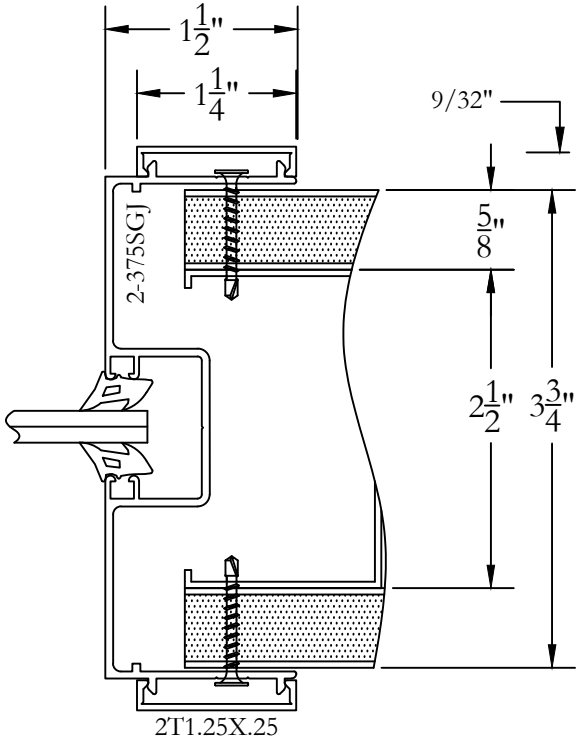

Bringing new light to interior achitecture

FRAMEWORKS

Frameworks Manufacturing
1910 Cypress Station Dr
Suite #100
Houston, Texas 77090

Phone: 713-692-5222
www.frameworks.com
email: orders@frameworks.com